Product spec. drawing	SR Server Rack	Model : SR-6942-2V	Release date : 19 Oct 15 Version no. : V2

Front view

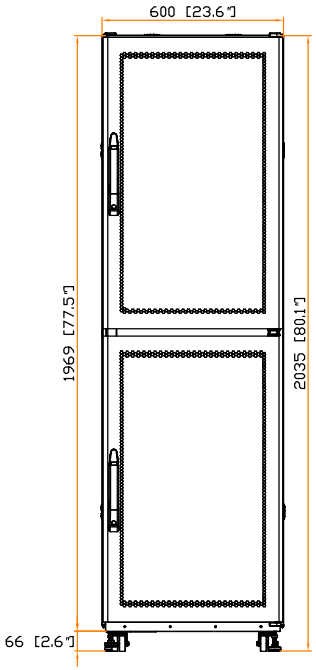

Rear view

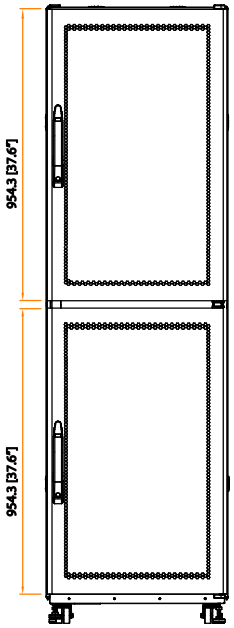

Side view

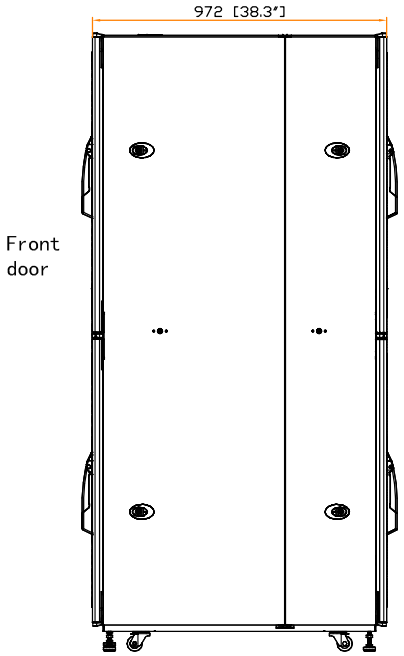

Front view

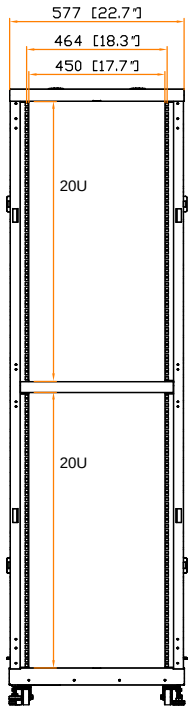

Side view(w/o side panel)

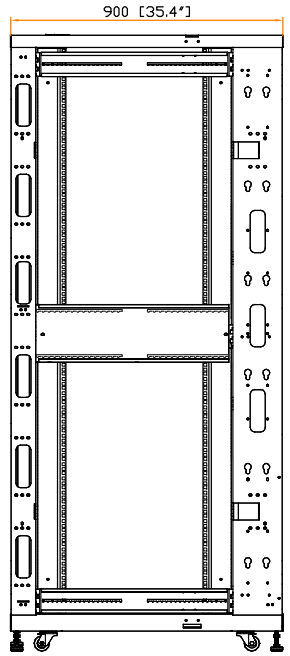

Top view

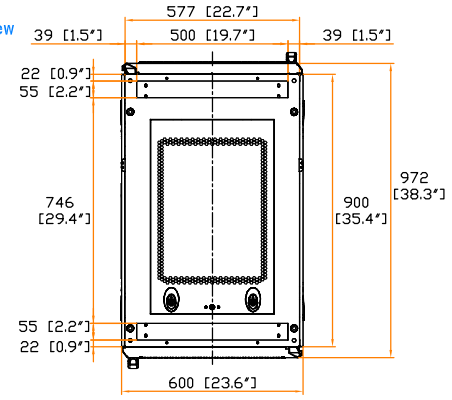

Front door

Bottom view

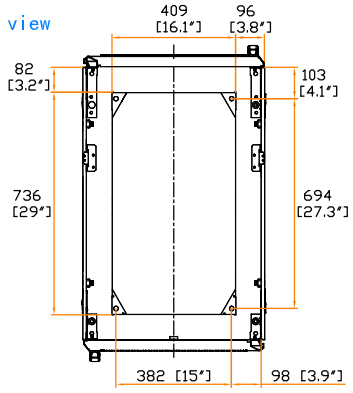

Front door

19"rail position

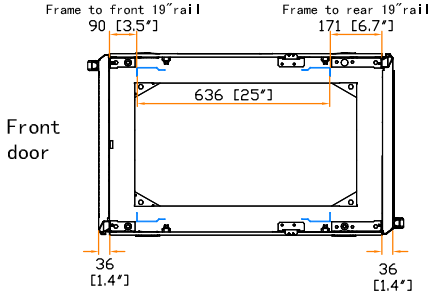

RoHS REACH

The company reserves the right to modify product specifications without prior notice and assumes no responsibility for any error which may appear in this publication.

Copyright 2015 Austin Hughes Electronics Ltd. All rights reserved.

AUSTIN HUGHES Design. Manufacturing. Global Services.

Dimension (Overall)	:	600 (W) x 972 (D) x 2035 (H) mm / 23.6 (W) x 38.3 (D) x 80.1 (H) in.
Net Weight	:	kg / lb
Color	:	Black (RAL - 9005) or Grey white (RAL - 9002)
Static Loading	:	kg / lb
Environmental	:	RoHS2 & REACH compliant by SGS

Unit : mm [in.]