Product spec. drawing	NSR Server Rack - 23" mounting	Model : NSR-8042-23	Release date : 15 Aug 16 Version no. : V1

Front view

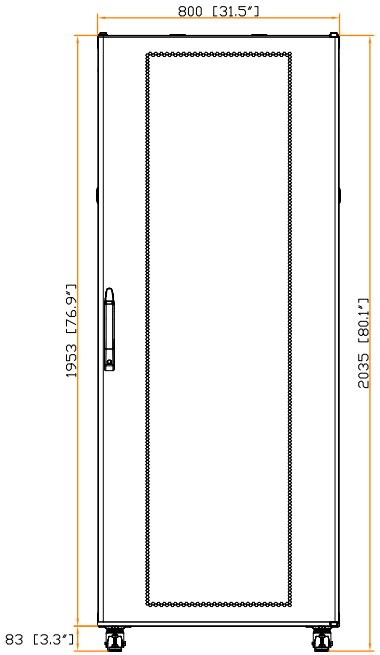

Rear view

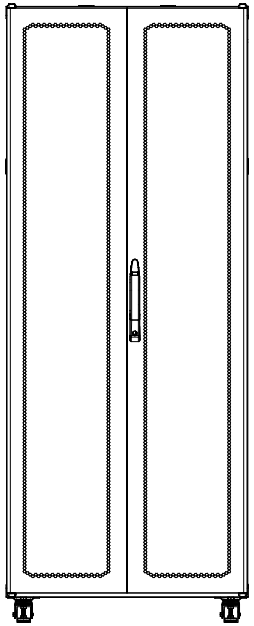

Side view

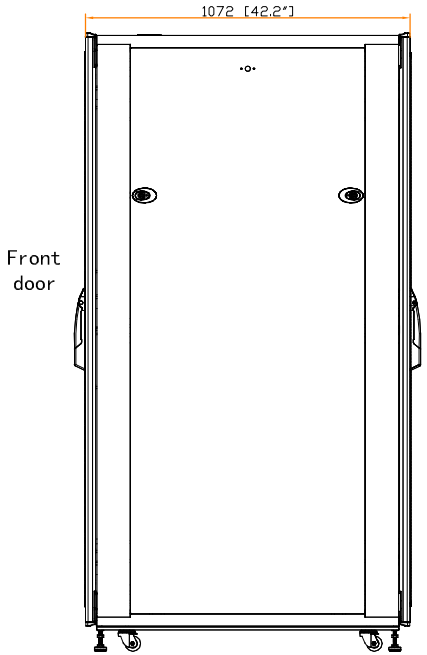

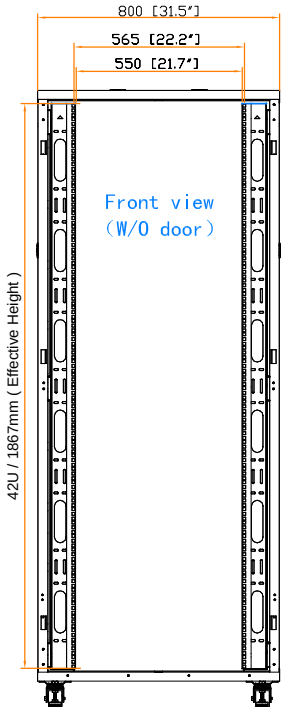

Side view(W/O side panel)

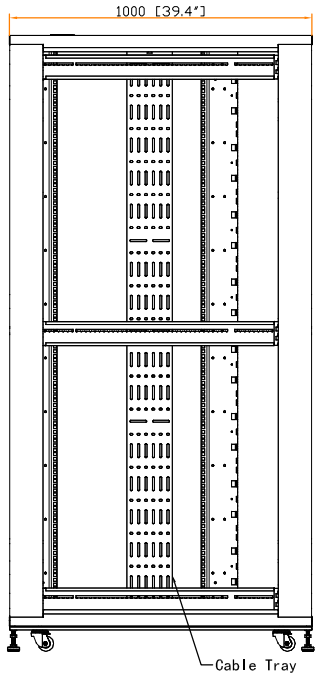

Top view

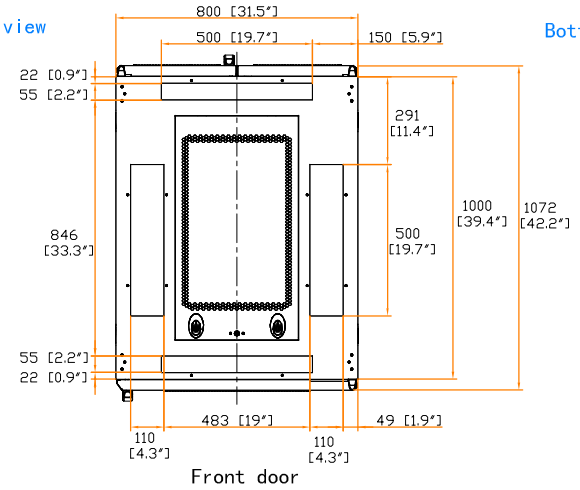

Bottom view

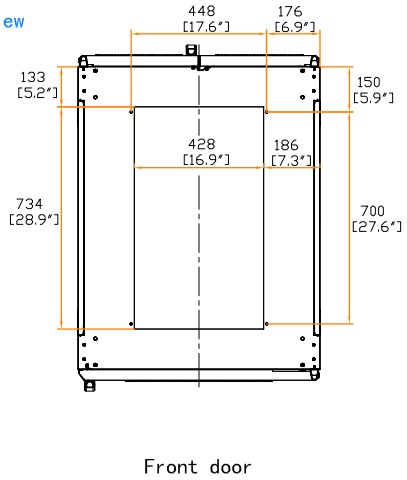

23" rail position

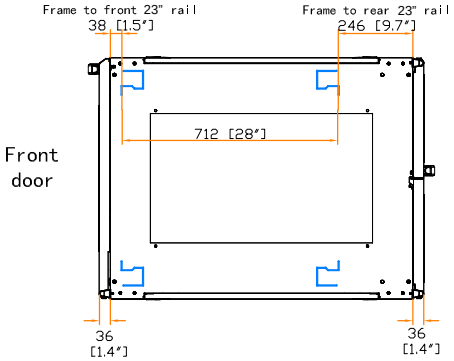

RoHS REACH

The company reserves the right to modify product specifications without prior notice and assumes no responsibility for any error which may appear in this publication.

Copyright 2016 Austin Hughes Electronics Ltd. All rights reserved.

AUSTIN HUGHES Design. Manufacturing. Global Services.

Dimension (Overall)	:	800 (W) x 1072 (D) x 2035 (H) mm / 31.5 (W) x 42.2 (D) x 80.1 (H) in.
Dimension (Effective)	:	800 (W) x 1000 (D) x 1867 (H) mm / 31.5 (W) x 39.4 (D) x 73.5 (H) in.
Net Weight	:	-kg / -lb
Color	:	Black (RAL-9005) or Grey white (RAL-9002)
Static Loading	:	750 kg / 1650 lb
Environmental	:	RoHS2 & REACH compliant by SGS

Unit : mm [in.]